At moments, we were conscious of dark lines crossing the spectrum, but the unfavourable conditions under which the observations were made prevented us from ascertaining by measurement or otherwise, whether any of these lines were Fraunhofer lines.—July 5.]

VIII. "The Physical Properties of Vulcanised India-rubber." By A. MALLOCK. Communicated by Lord RAYLEIGH, Sec. R.S. Received May 9, 1889.

Considering the wide use now made of india-rubber, it seems curious that the elastic constants which define its properties should not be as well known as the corresponding quantities for iron or brass.

The only published quantitative measure, however, with which I am acquainted, relating to the subject, is contained in a paragraph of Thomson and Tait's 'Natural Philosophy' (p. 230, Part II, New Edition), where the resilience of vulcanised india-rubber, *i.e.*, the amount of work restored by the substance when allowed to return to its equilibrium form, after having been stretched to a maximum short of rupture, is stated to be equivalent to its own weight raised through 1200 metres.

In 1885 I made some measures of the value of Young's modulus for india-rubber, and also examined the effect of continued strain on the material, but at that time I was not aware how much different kinds of india-rubber differed from one another in these respects, and the experiments were made on one kind of vulcanised rubber only, namely, a soft grey sort, which when cut, shows small spots of a yellowish-grey scattered throughout its substance. This year I resumed the experiments, using specimens of three different kinds of vulcanised india-rubber made at Silvertown. The specimens were cut from a sheet half an inch thick, and were square in section, and one foot long.

One was a soft grey kind, apparently identical in properties with that experimented on in 1885. The next was the well-known red sort, and the third a dark grey, much harder and stiffer than the two former.

On these specimens experiments were made to determine the three elastic constants, viz., Young's modulus, the simple rigidity, and volume elasticity. The apparent viscosity was also measured, and the behaviour of the materials under great strains, and strains continued for long periods, observed.

Young's modulus and the simple rigidity were each measured in two ways, statically and dynamically. The statical measurements being made by observing the extension and angle of torsion produced by a known force and moment; while for the dynamical measures the

frequencies were noted of the vibrations which the respective elasticities produced when acting on a known mass and moment of inertia.

As might be expected, the values obtained in these two ways do not agree, those given by the dynamical method being in all cases greater than the statical values.

The volume of elasticity can be deduced from the values of Young's modulus and the simple rigidity by the equation

$$\kappa = \frac{qn}{3q-9n},$$

where κ is the volume elasticity, q Young's modulus, and n the simple rigidity.

But since κ for india-rubber is very large, q is very nearly equal to $3n$, and the measures of q and n must be very accurate to make this formula of any use. The volume elasticity, therefore, was determined by direct measurement.

The mean values deduced from all the experiments are given in the table at the end of the paper. The values in this table refer to small strains.

When the extensions and distortions are large the values of the constants alter enormously, and the results are exhibited better by diagrams than numerically.

One property possessed by india-rubber, and to which part of the difference between the dynamic and static values of the elasticities is due, is that when strained by a given force, the extension due to the force increases gradually, rapidly at first, and then more and more slowly for many days. The difference between the extension at the first moment after the application of the force and the limit to which the extension tends is proportional to the extension, and the rate at which the extension takes place an exponential function of the time elapsed since the application of the force.

When the force is removed, the contraction takes place gradually in the same way, but not at the same rate, the constant multiplying the time in the exponent being different in the two cases. On the other hand, if the extension, not the force, is given, the force diminishes according to an exponential law as the time elapsed since the extension increases; and if the extension be quickly reduced, until the force is nothing, and then maintained constant, a contractile force will appear, and increase with the time until it reaches the amount due to difference between the length the moment after reduction and the natural length.

The material appears, in fact, to take a subpermanent set, which ultimately becomes a definite fraction of the extension to which it is subjected.

DIAGRAM I.

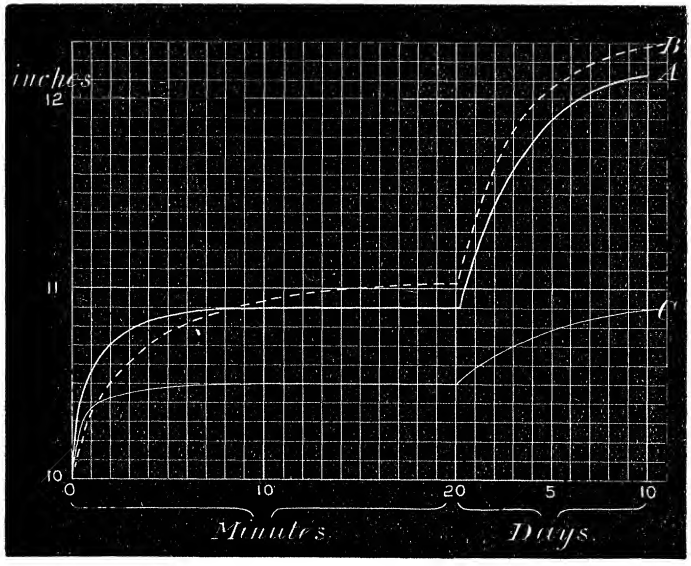

DIAGRAM II.

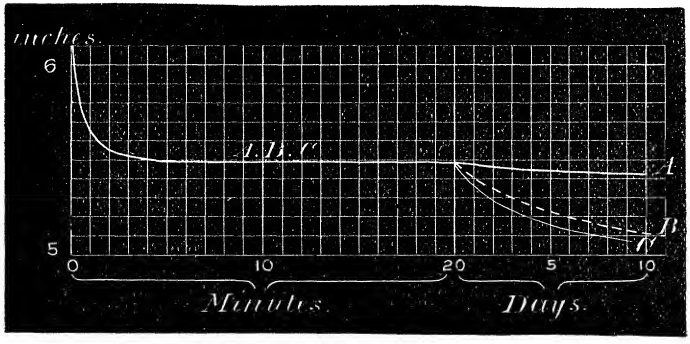

Diagrams I and II illustrate these properties, which are probably possessed to a very minute degree by many substances usually considered perfectly elastic.

From these diagrams it will be seen that the two elastic constants, viz., Young's modulus and the rigidity, are not completely defined unless the time is given for which the force calling them into play acts.

Another property of india-rubber, especially conspicuous in the soft grey kind, is that when stretched to a certain point the resistance to

further extension increases very rapidly, so rapidly indeed as to suggest that the structure of the material brings some sort of mechanical stop into action. See Diagram III.

Diagram III.

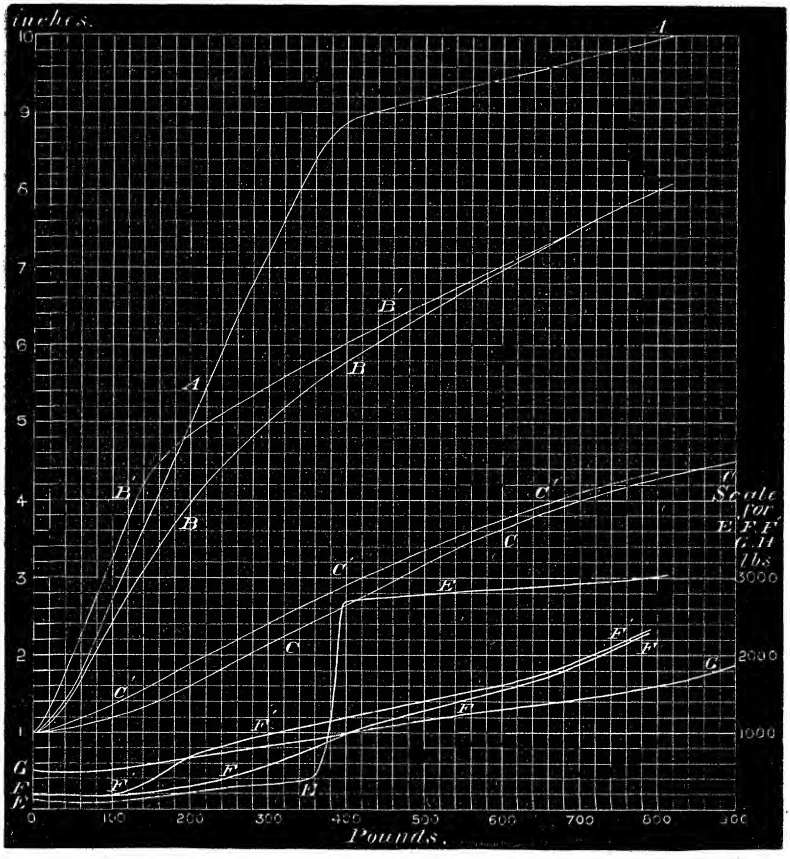

Several mechanical mixtures such as putty (chalk and oil), damp clay, and sand and water exhibit similar properties. If a lump of putty be well rolled or beaten it will be found to be slightly elastic, but beyond the elastic limit to be easily stretched for a certain distance and then to become almost hard, at the same time the appearance of the surface changes from a smooth, oily character to a dull granular one.

The explanation in this case is that the hard particles of the mixture are, in its undisturbed state, separated each from its neighbours by a wall of fluid of finite thickness. When the material is distorted

the particles separate from one another in one direction and approach one another in a direction at right angles to this. As long as this approach merely involves the flow of the intervening fluid, the distortion takes place with comparative ease; but when the approach of the particles brings them into actual contact with one another, the conditions change. There is no longer a store of fluid between, say, the vertical layers of particles which can be drawn on to supply the increased distance between the horizontal layers, and if the strain is augmented it must imply either a distortion of the hard particles themselves or an increase of volume of the whole mass.

The latter is what happens in the cases just mentioned, the dull surface being the result of the fluid being sucked or rather pushed inwards by atmospheric pressure to supply the extra volume required in the interior, thus leaving the surface comparatively dry.

The dry patch which is seen for a short time to surround fresh footsteps on some kinds of wet sand, is an example of the same kind of action.

I will now describe the various experiments by which the results given in the table were obtained.

(1.) *Statical Measure of Young's Modulus.*

The apparatus used is shown in fig. 1. The specimen of india-rubber is attached at one end to the balance beam and at the other to

FIG. 1.

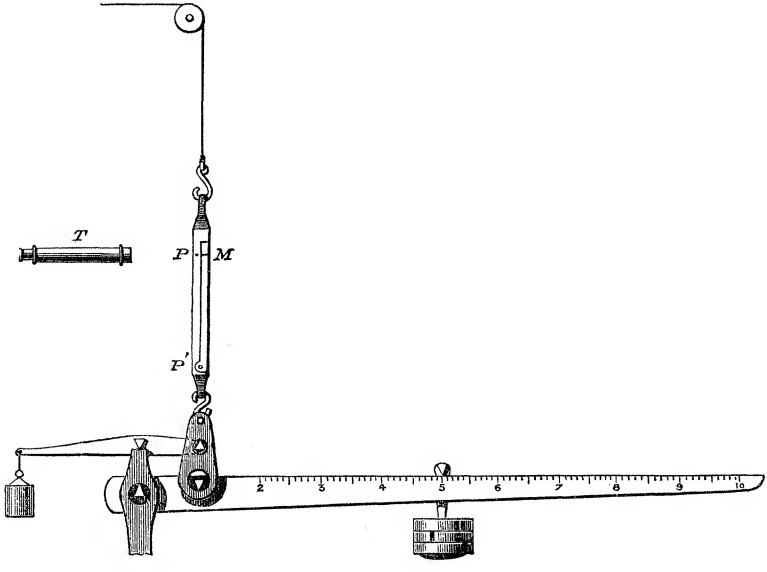

a cord passing over a pulley, by means of which it can be subjected to any desired strain.

Two very fine pins P, P′ (fig. 2), were fixed in the india-rubber at a distance of 10 inches from one another, and a thin strip of ebonite, E,

FIG. 2.

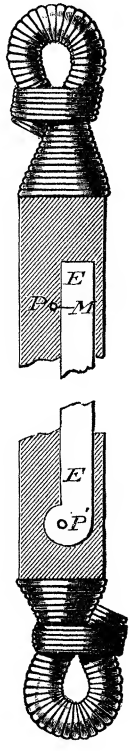

having near one end a hole the size of the pin, and a mark, M, 10 inches from the hole, was then placed against the india-rubber with the pin P′ passing through the hole; thus, when unstrained, the pin P was exactly on the same level as M; when the india-rubber was strained the extension PM was measured by the cathetometer T—

Let w = stretching force,
l = unstrained distance between P and P′,
l' = distance between P and P′ under the action of w,
s = sectional area when length is l,
s' = „ „ „ l',
q = Young's modulus.

Then $w = q\frac{l'-l}{l}s$,

and since india-rubber is nearly incompressible, $ls = l's'$,

hence $$q = \frac{l'w}{s(l'-l)}.$$

To show the sort of agreement among themselves of the measures made in this way, I subjoin a table showing the results of five experiments, chosen at random from many others, on each of the kinds of india-rubber used, the units being inches and pounds.

Soft grey. $l = 10.$ $s = 0{\cdot}2690.$		Red. $l = 10.$ $s = 0{\cdot}2307.$		Hard grey. $l = 10.$ $s = 0{\cdot}2625.$	
$l'-l.$	$q.$	$l'-l.$	$q.$	$l'-l.$	$q.$
0·228	124·9	0·163	161·1	0·038	497·0
0·385	125·3	0·345	163·0	0·078	491·2
0·530	129·2	0·471	166·9	0·115	502·3
1·77	123·9	1·430	166·5	0·156	495·7
4·85	114·0	3·390	164·5	0·360	463·5

The lowest values for q are those given by experiments in which the stretching force acted for the longest time.

There is evidence also, which appears more strongly in the results represented by Diagram III, that q diminishes with the extension until the stretched length is about 3/2 times the natural length.

(2.) *Young's Modulus. Dynamical Measure.*

AP (fig. 3) is a pendulum. The strip of india-rubber DC was held rigidly at D, and attached at C to the arm AB bracketed out from the pendulum.

The experiments were made by observing the period of the pendulum with the india-rubber attached, and noting the difference between this and the natural period of the pendulum.

The india-rubber was, of course, initially strained a little, and the amplitude of the vibrations used was never great enough to make the strain vanish.

Let T_0 be the natural period of the pendulum,
λ = length of equivalent simple pendulum,
T_1 = period of pendulum with india-rubber attached,

AB = r,
l = natural length of india-rubber,
l_1 = DC = length of do. when attached to pendulum,
s = natural sectional area of do.,
W = weight of pendulum.

Then q as before being Young's modulus,

$$q = \frac{W l_1^2 \lambda (T_0^2 - T_1^2)}{r^2 T_1^2 l_0 s}.$$

FIG. 3.

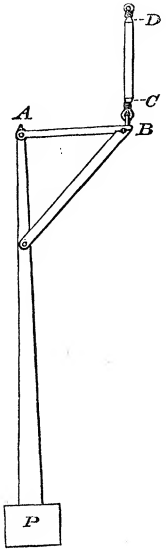

The following are examples of the measures thus made:—

λ = 65·2 in. r = 13·5 in. l_0 = 11·2 in. W = 10·2 lb. T_0 = 2·581 sec.

Soft grey. s = 0·2690.			Red. s = 0·2307.			Hard grey. s = 0·2625.		
T_1.	l_1.	q.	T_1.	l_1.	q.	T_1.	l_1.	q.
1·725 1·75 1·72	11·35	193·1	1·788 1·784 1·791	12·25	217·75	1·315 1·33 1·30	11·3	500·7

It will be noticed that the values of q thus obtained are much greater for the soft grey and red varieties than those obtained statically, and the chief part of this difference is due to their not having time to take the subpermanent set which they would acquire if the period was very long, but in part also it must be due to a thermodynamic cause.

(3.) *Simple Rigidity. Statical Measure.*

The arrangement shown in fig. 4 was used for both the statical and dynamical measures of the rigidity.

FIG. 4.

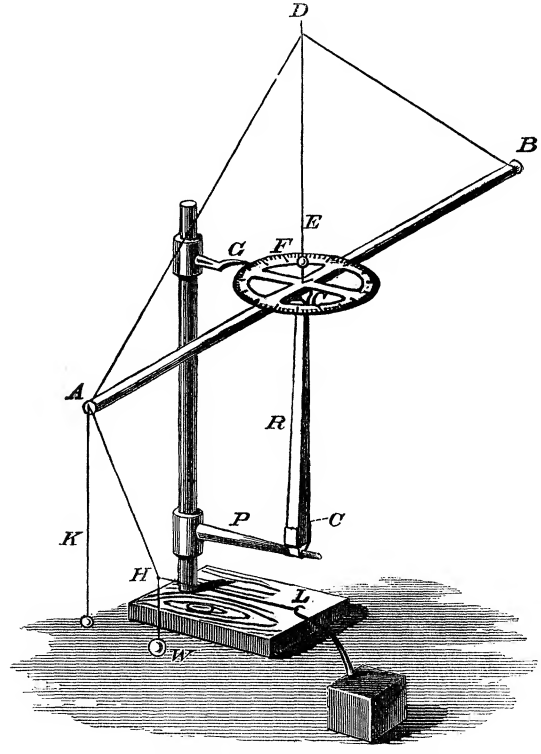

The india-rubber was held at each end by clamps of sheet brass C, C′ shown in section in fig. 5.

Through the lower part of C the rod P passes, which fixes its position rigidly. The upper clamp C′ is attached to the bar AB, this bar being suspended in a horizontal plane by two silk threads from the point D. A small plumb-bob is also hung from D to facilitate the centering of the upper clamp and the divided circle F. When the

FIG. 5.

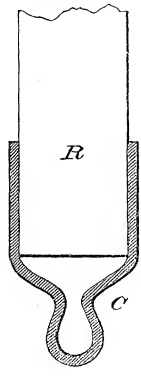

adjustments are complete, the axis of the india-rubber is the continuation of the line DE.

In the statical measures two silk threads were attached to A, one carrying the plumb-bob K, and the other the small weight W. W was drawn to one side as shown, care being taken that the horizontal projection of AH was at right angles to AB, and that HL was horizontal. The distance HK was then measured with a scale, and the angle through which the moment due to the horizontal component of force acting along AH turned the bar AB was read on the divided circle F.

The section of the specimens of india-rubber used in these experiments being approximately square, and the reaction against torsion of a square prism being 0·883 that of a circular cylinder of the same area,* it follows that, since the torsional rigidity of similar prisms varies as the fourth power of the linear dimensions of their section, therefore the circular cylinder which has the same torsional rigidity as a square prism whose side is a, has a radius equal to $(a/\pi)\sqrt[4]{0{\cdot}883}$.

In fig. 4 let AB = 2R,
CC′ = l = length of the india-rubber,
HK = x,
AK = λ,
ϕ = angle through which the india-rubber is turned, expressed in circular measure,
s = sectional area of india-rubber,
W = weight hung from H.
Then if n = coefficient of rigidity
and $r = (s^{\frac{1}{2}}/\pi)(0{\cdot}883)^{\frac{1}{2}}$,

$$n = \frac{2\mathrm{R}\mathrm{W}lx}{\pi\phi r^4\lambda}.$$

* See Thomson and Tait, 'Nat. Phil.,' vol. 1, Part II, p. 257. New Edition.

The measures of n from each specimen are given below. Many experiments were made, all agreeing very closely.

$2R = 28{\cdot}4$ in. $l = 11{\cdot}2$ in. $\lambda = 10{\cdot}75$. $W = 100$ grains.

Soft grey. $r = 0{\cdot}1560$ in.			Red. $r = 0{\cdot}1607$ in.			Hard grey. $r = 0{\cdot}1547$ in.		
x.	ϕ.	n.	x.	ϕ.	n.	x.	ϕ.	n.
2·25	0·785	65·68	2·3	0·915	50·76	4·20	0·612	161·4
2·3	0·80	65·51	3·16	1·268	50·33	5·05	0·73	162·4

(4.) *Rigidity, Dynamical Measure.*

The small weights hung from A being removed, the periods of the torsional oscillations of AB about DE were observed.

Let T = the time of oscillation,
w = weight of AB,
g = acceleration of gravity in inches and seconds.

Then for the other quantities involved, the notation being the same as in (3),

$$n = \frac{8\pi w R^2 l}{3T^2 r^4 g}.$$

For both the grey kinds of india-rubber the period varied considerably with the arc of vibration, owing partly to the extinction of the vibration being so rapid. The results were as follows:—

Soft grey.			Red.			Hard grey.		
Arc.	T.	n.	Arc.	T.	n.	Arc.	T.	n.
60°	13·2	80·6	60°	14·8		60°	9·4	156
30	12·7		30	14·9	56·85	30	8·8	
10	12·0	to	10	14·8		10	8·55	to
5	11·5	127·3	5	14·9		5	8·4	202·6

What the explanation is of the very large values for n given by this method for the soft grey india-rubber, I have not been able to find out.

Both torsional measures give n greater for the soft grey than for the red, whereas by the measures of Young's modulus, which should be very nearly equal to $3n$, n is considerably greater for the red.

It is possible that there may be a kind of "grain" in the sheets of the soft grey india-rubber, and that as the distortion produced by the extension in Experiments (1) and (2) is not in the same direction as that due to the torsion in Experiments (3), (4), the origin of the difference is to be looked for in this quarter.

(5.) *Young's Modulus for Large Extensions.*

Diagram III gives the results of these experiments. They were made with the apparatus shown in fig. 1. The actual measures were made on strips of $(\frac{1}{8})^2$ inch section, which were cut from the larger pieces in a planing machine by a sharp thin knife, wetted with dilute caustic soda. The sectional area of the strips so cut was exceedingly uniform, and its smallness was convenient, as it allowed of moderate forces being used to produce the required strains, which were increased until the breaking strain was reached.

In the diagram the results are reduced to what they would have been had the piece of india-rubber operated upon been a cube of one inch when unstrained.

The ordinates of the curves A, B, B′, C, C′, are the lengths which such cubes of soft grey, red, and hard grey india-rubber would respectively assume when stretched by forces represented by the abscissæ. In the curves B, C, the readings were taken as rapidly as possible, while in B′, C′, an interval of two minutes was allowed between each successive addition to the strain.

There were from thirty to fifty observations made for each curve. In the case of the soft grey, it did not seem to make much difference whether the readings were taken quickly or otherwise.

Let x and l be the strained and natural lengths of the india-rubber, and y the stretching force, then $q = ldy/s'dx$, and if the material is incompressible, $q = l'dy/sdx$.

By this equation the curves E, F, G were deduced from A, B, C, to show the variation of q with the extension. It is worth while to observe that since if q remain constant for all extensions,

$$\mathrm{F} = q\frac{l'-l}{l'}\mathrm{A}$$

$$l' = \frac{ql\mathrm{A}}{q\mathrm{A}-\mathrm{F}},$$

so that with q constant, if a stretching force be applied equal per unit area to Young's modulus, the extension will be infinite.

The breaking strains for the different specimens were found to be

Soft grey.....	8100	pounds per square inch, nearly.
Red.....	6400	
Hard grey.....	4400	

The section is that at the moment of rupture.

These numbers, therefore, are not the forces required to break a length of india-rubber of one square inch section when unstrained. To obtain the force requisite for this purpose, the numbers given above must be divided by the extensions of the unit length at the moment of rupture. They are given directly by the termination of the curves A, B, C, and are about 820 lbs. for all three kinds.

The tensile strength, however, is dependent in some measure on the time for which the force is applied, a long-continued application of force causing rupture when the force itself is not sufficient to produce the maximum extension. This is particularly noticeable in the case of the hard grey india-rubber.

(6.) *Volume Elasticity.*

There was some difficulty in obtaining a direct measure of this coefficient, owing to the very large pressures which have to be employed to produce any measurable compression.

The plan which succeeded best was to enclose the india-rubber in a

FIG. 6.

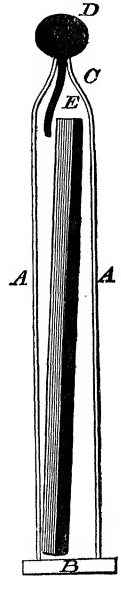

glass tube, A A, fig. 6, the lower end of which was ground flat and cemented to a small plate of thick glass, B. The other end of the tube was drawn out to a neck, the aperture being about 0·1 inch in diameter.

After the india-rubber was enclosed and the plate B cemented on, A was filled with water, great care being taken that no air bubbles were enclosed. The neck was then closed by a ball of soft wax and turpentine mixture, D, and the whole immersed in water in a cast-iron cylinder (fig. 7), when it was subjected to a pressure of about 550 lbs. per square inch.

FIG. 7.

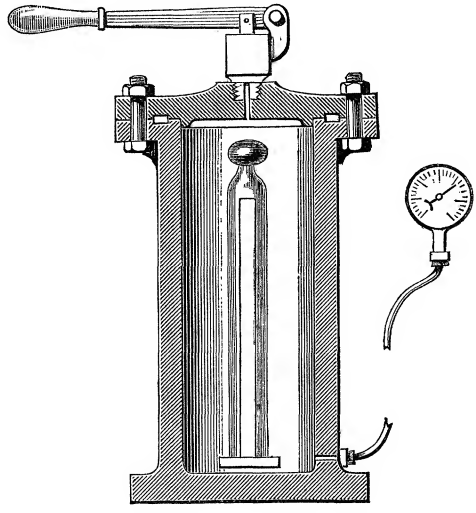

Under this pressure the water and india-rubber are somewhat compressed. Since the wax and turpentine is soft, the glass tube experiences but little difference of internal and external pressure, the mixture flowing in through the neck of the tube and forming a long filament, E, the volume of which represents the compression of the contents of the tube.

When the pressure is gradually removed this filament is partly expelled, but retains its shape, and its length and sectional area being known, the data are supplied for computing the volume elasticity of the india-rubber.

Let V' be the volume of the tube A,
V do. india-rubber,
v do. the intruded wax,
κ' the volume elasticity of water,
κ do. do. india-rubber,
p the pressure in cylinder.

Then $$\kappa = \frac{V\kappa' p}{\kappa' v - p(V' - V)}.$$

As a test of the accuracy of the method, the volume elasticity of water was measured. The value found for κ' was 296,000 lbs. per square inch, a result which is not far from the truth.

The values for india-rubber were

	κ.
Soft grey.....	198,000
Red.....	115,000
Hard grey.....	940,000

These values are the means of all the experiments after the first. The first application of pressure, however, always produced a much more considerable compression, and if the volume of elasticity had been deduced from the first experiment only, its value would have been about half that given above in the case of the soft grey and red; and for the hard grey, about one-eighth.

(7.) *Viscosity.*

The rate at which the vibration in Experiment (4) died away was used to determine the coefficient of viscosity.

Diagram IV gives the "curves of extinction" for the three kinds of india-rubber. The ordinate of the curve is at each point, the ampli-

DIAGRAM IV.

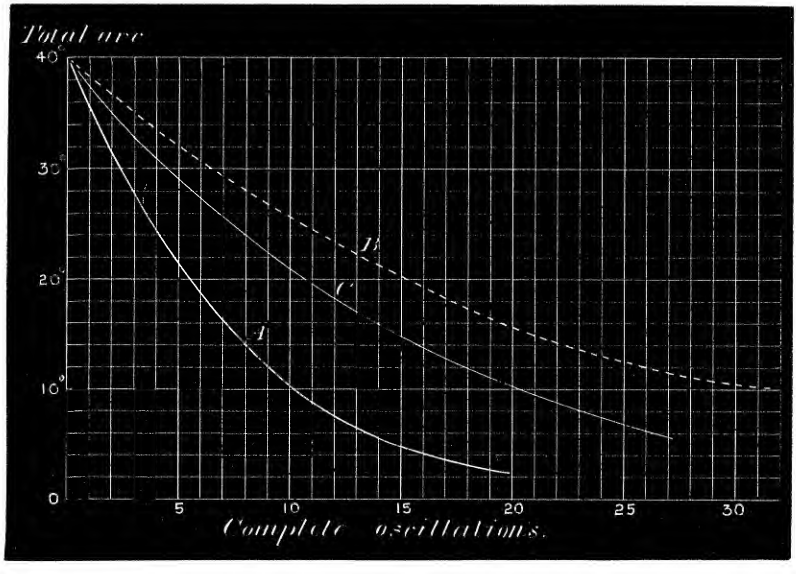

tude which the vibration would have if the phase of the vibration was such that a maximum distance from the position of rest occurred at that point.

Let λ be the logarithmic decrement of the vibration, c_1 and c_n the amplitudes of the 1st and nth vibrations respectively,

then $$\lambda = \frac{1}{n-1} \log_e 10 \log \frac{c_1}{c_n},$$*

and if p be the coefficient of viscosity,

$$p = \frac{4R^2wl\lambda}{3g\pi r^4 T}.$$

The symbols with the exception of λ having the same meaning as those in Experiment (4).

The values found for p were

	p.	
Soft grey.....	13·74	pounds per square inch.
Red	2·578	
Hard grey	7·725	

The coefficient p represents the tangential force required to distort a cube of one inch of the material at the rate of one inch per second, independently of that necessary to overcome the elastic reaction, on the assumption that the viscous resistance to distortion varies as the rate of distortion. Part of the apparent viscosity however must be due to the difference of the rates at which the sub-permanent set is produced and removed.

(8.) The densities of the specimens were

Soft grey.....	1·289
Red	1·407
Hard grey	2·340

(9.) *Chemical Composition.*

I had no means at my disposal here of making a good analysis, but a rough determination of the percentage of sulphur was obtained by decomposing a known weight of each kind with caustic soda and nitre, and observing the quantity of barium chloride required in each case to precipitate the sulphate formed. The results were

	Sulphur, per cent.
Soft grey.....	5·7
Red	2·1
Hard grey	3·8

* Maxwell's 'Electricity and Magnetism,' vol. 2, 239.

Both the grey india-rubbers yield a considerable ash when burnt. The hard grey, as is apparent from its density, containing a large percentage of inorganic matter.

The following table gives the mean of all the experiments.

Table showing the Physical Properties of three kinds of Vulcanised India-rubber.

Description of india-rubber.	Density.	Young's modulus.		Simple rigidity.	
		Statical.	Dynamical.	Statical.	Dynamical.
Soft grey.....	1·289	124	195	65	80 to 127
Red.....	1·407	166	217	50	57
Hard grey.....	2·340	495	500	158	156 to 202
	Volume elasticity.	Viscosity.	Limit of stretching of unit length.	Breaking strain.	Breaking strain for a square inch of unstrained material.
				about	about
Soft grey.....	198,000	13·74	9·9	8100	820
Red.....	115,000	2·578	7·3	6400	820
Hard grey.....	940,000	7·725	4·4	4400	820

The units employed throughout this paper are the inch, pound, and second.

The Society adjourned over the Whitsuntide Recess to Thursday, June 20th.

Presents, June 6, 1889.

Transactions.

Baltimore:—Johns Hopkins University. Studies in Historical and Political Science. Ser. 7. Nos. 5–6. 8vo. *Baltimore* 1889. The University.

Batavia:—Bataviaasch Genootschap van Kunsten en Wetenschappen. Notulen. Deel XXVI. Aflev. 3. 8vo. *Batavia* 1888; Tijdschrift voor Indische Taal-, Land- en Volkenkunde. Deel XXXII. Aflev. 5. 8vo. *Batavia* 1889; Nederlandsch-Indisch Plakaatboek, 1602–1811. Deel V. 8vo. *Batavia* 1888. The Society.

DIAGRAM I.

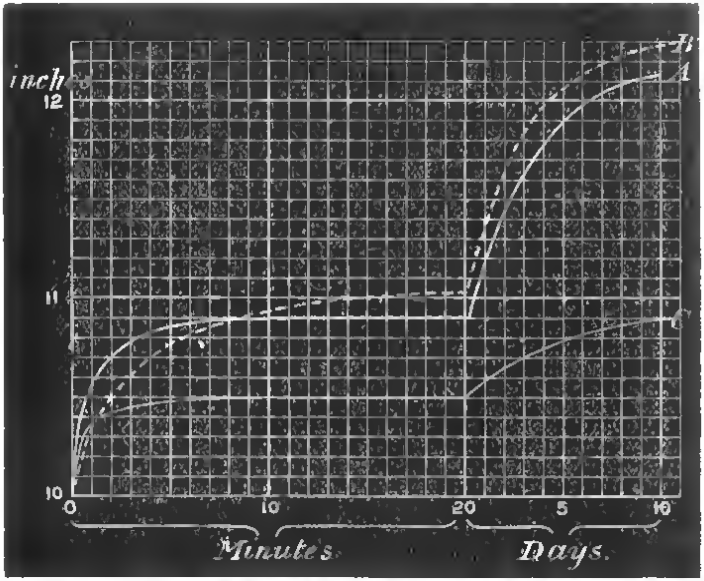

DIAGRAM II.

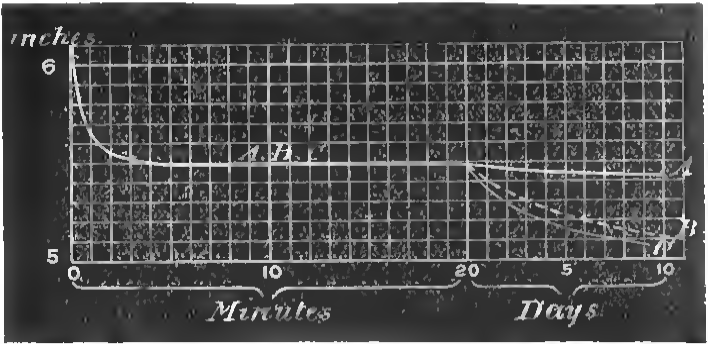

Diagram III.

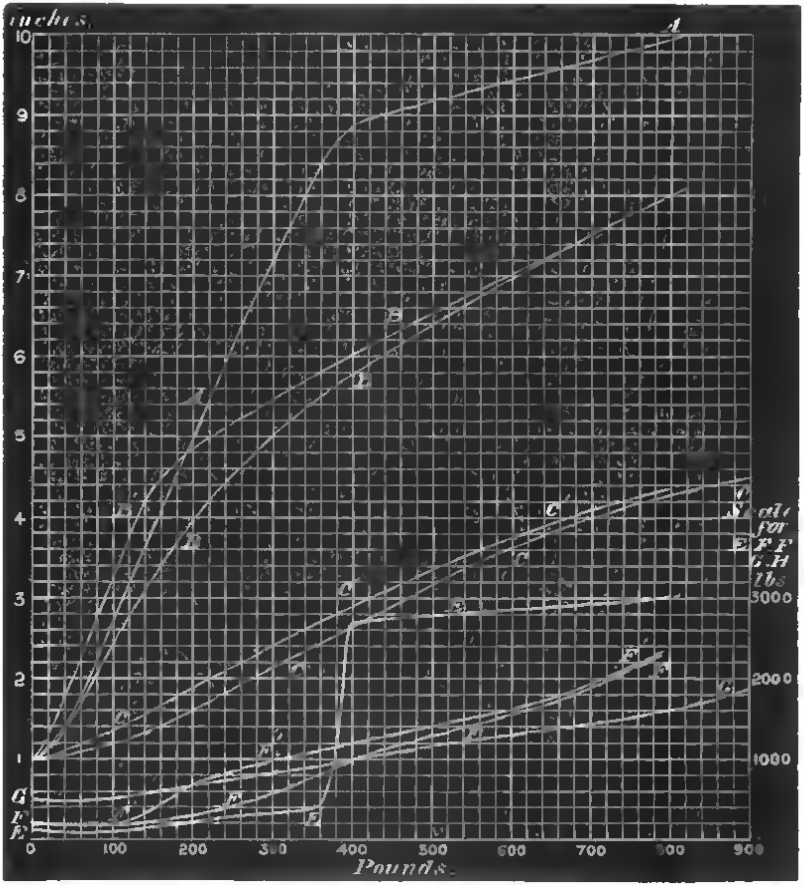

inches.
10
9
8
7
6
5
4
3
2
1
0
100
200
300
400
500
600
700
800
900
Pounds.
A
B
C
D
E
F
G
Scale for E F F G H lbs
3000
2000
1000

FIG. 1.

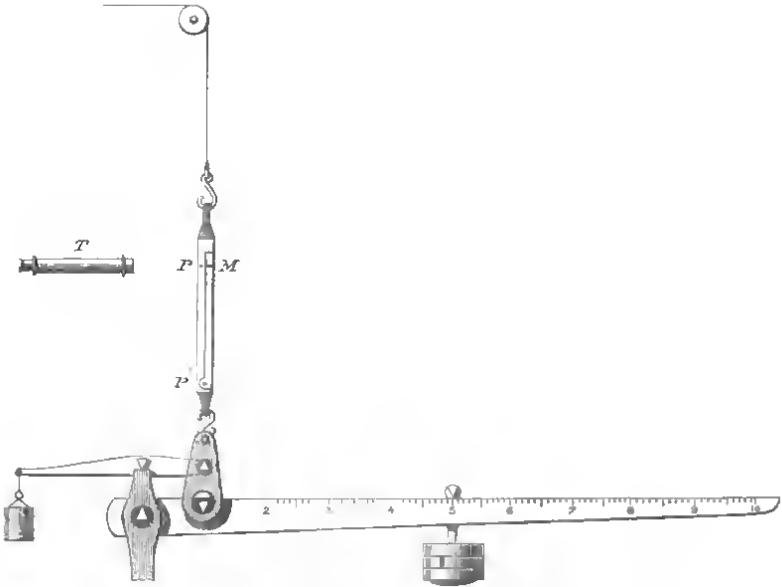

FIG. 2.

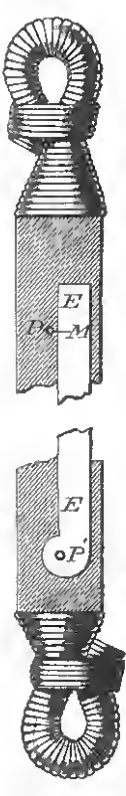

FIG. 4.

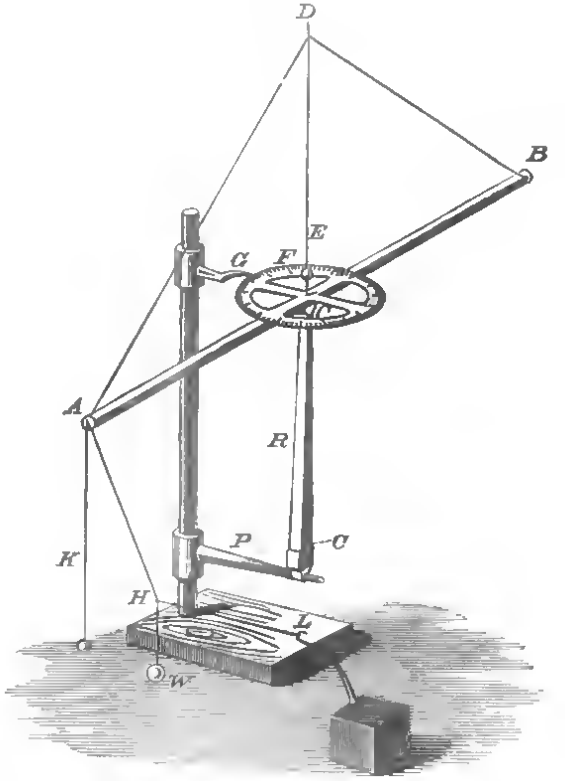

FIG. 6.

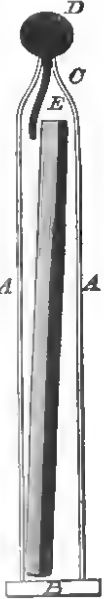

FIG. 7.

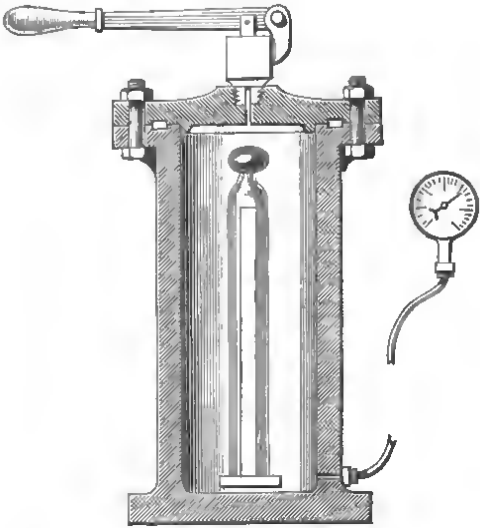

DIAGRAM IV.

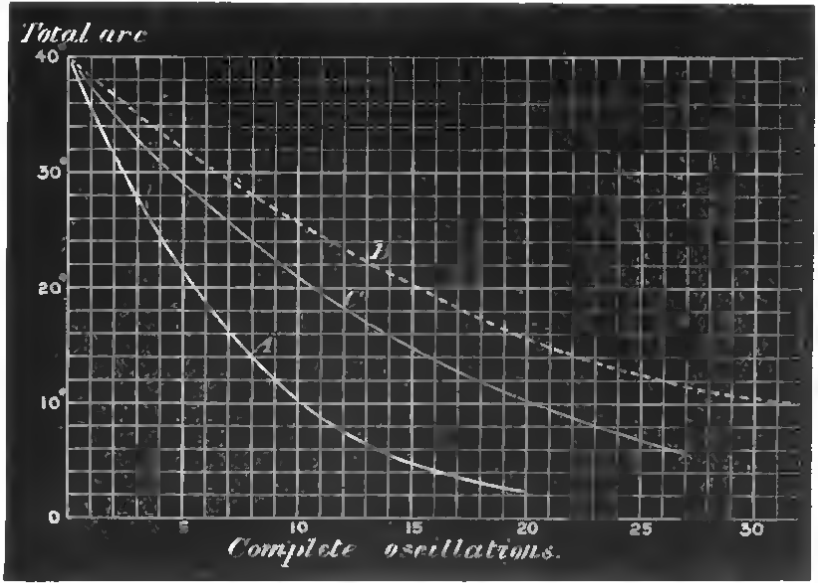
Total arc
40°
30°
20°
10°
0
5
10
15
20
25
30
Complete oscillations.
A
B
C